# Extended Reach, Double End, Solid Carbide, Corner Rounders

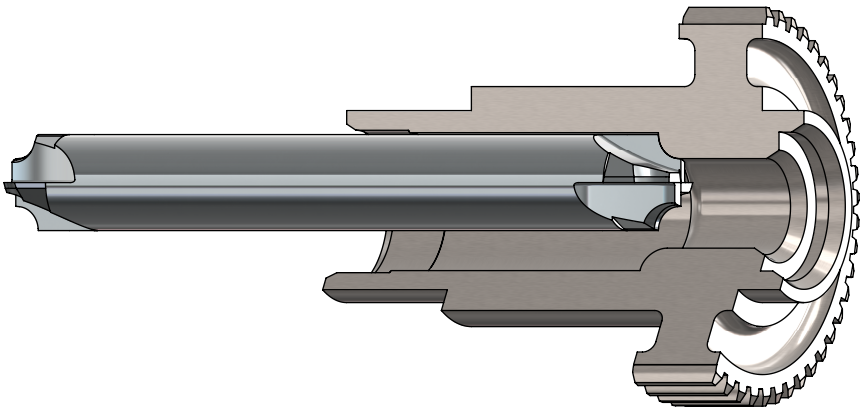

**Specials in 4-6 Working Days**

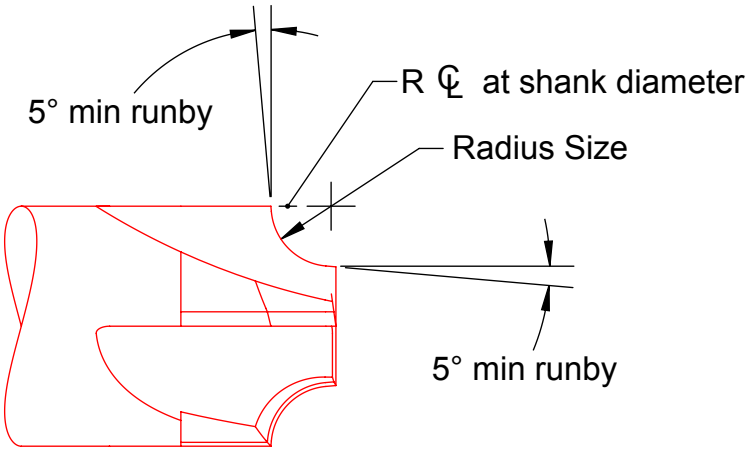


Radius center at shank diameter allows machining close to other features.

| Number | Radius sizes, add to prefix, example CRL1/2-062 | | | | | | | | Shank & OAL | Flutes | Price |
|---|---|---|---|---|---|---|---|---|---|---|---|
| CRL1/4- | .010 | .015 | .020 | .031 | .046 | .062 | | | 1/4 X 3 | 2 or 4 | $90. |
| CRL3/8- | .010 | .015 | .020 | .031 | .046 | .062 | | | 3/8 X 4 | 2 or 4 | $110. |
| | .093 | .125 | | | | | | | 3/8 X 4 | 2 or 4 | |
| CRL1/2- | .010 | .015 | .020 | .031 | .046 | .062 | .093 | .125 | 1/2 X 4 | 2 or 4 | $125. |
| | .156 | .187 | | | | | | | 1/2 X 4 | 2 or 4 | |


Phone 916 408-2442 FAX 916 408-0740

Toll free phone 866 440-8665

A. B. TOOLS, INC.
1051 Aviation Blvd.
Lincoln, CA, 95648-9312


If any product is not satisfactory we will modify, replace or refund.


www.abtoolsinc.com
E-Mail: mail@abtoolsinc.com